SECTION 4

PERFORMANCE, CALIBRATION, AND MAINTENANCE

WARNING

TO AVOID PERSONAL INJURY FROM ELECTRIC SHOCK DO NOT REMOVE INSTRUMENT COVERS OR PERFORM ANY MAINTENANCE OTHER THAN DESCRIBED IN THIS MANUAL. INSTALLATION AND MAINTENANCE PROCEDURES DESCRIBED IN THIS MANUAL ARE TO BE PERFORMED BY QUALIFIED SERVICE PERSONNEL ONLY.

4.1 PERFORMANCE TESTS

The following procedures describe methods for comparing VideoBridge performance with its published specifications. These tests are made via simplified testing procedures rather than by exercising the millions of combinations of test frequencies, test levels, and L, R, and C ranges. If the test results are found to be out of specification limits, check that controls are properly set, then proceed to Section 4.2 Calibration.

When large numbers of measurements are made at a particular frequency, test level, and/or parameter, these performance tests can be customized to include the specific testing needs.

NOTE: Allow a 10 minute warm up period before conducting any performance tests.

Equipment Required	Recommended Model/Type
Resistance Standards:	
1Ω ±Ø.Ø1%	ESI SR1
1ØΩ ±Ø.Ø1%	ESI SR1
1ØØΩ ±Ø.Ø1%	ESI SR1
1kΩ ±Ø.Ø1%	ESI SR1
1Øk Ω ±Ø.Ø1%	ESI SR1
1ØØkΩ ±Ø.Ø1%	ESI SR1
1MΩ ±Ø.Ø1%	ESI SR1
Capacitance Standards:	
1nF ±Ø.Ø1%	Genrad 1404A, 3-term, air
1ØØnF ±Ø.Ø1%	Genrad 1409T, 3-term, Silvered mica
Frequency Counter:	
2ØHz to 2ØkHz ±Ø.ØØ1%	Hewlett Packard 5315
Digital Multimeter:	
AC voltage 2ØØmV, 2V RMS full scale AC current 2mA, 2ØmA, 2ØØmA RMS full scale Bandwidth 2ØHz to 2ØkHz Accuracy ±Ø.5%	Fluke 86ØØ

4.1.1 Frequency Accuracy Test

STEP 1. VideoBridge setup:

Function	Cs, D
Range	AUTO
Frequency	20000Hz
Test level	1000mV
Measurement speed	MEDium
Measurement mode	Single

STEP 2. Connect a BNC-to-BNC cable between the frequency counter input and the VideoBridge HI DRIVE (HD) unknown terminal. Leave the other unknown terminals unconnected.

STEP 3. The counter should read: 20000Hz ±2Hz (50.000µs ±0.005µs).

STEP 4. Set VideoBridge frequency to: 3750Hz.

STEP 5. The counter should read: 3750.00Hz ±0.37Hz (266.667µs ±0.027µs).

STEP 6. Set VideoBridge frequency to: 1000Hz.

STEP 7. The counter should read: 1000.00Hz ±0.10Hz (1000.00µs ±0.10µs).

STEP 8. Set VideoBridge frequency to: 248.96Hz

STEP 9. The counter should read: 248.96Hz ±0.025Hz (4.01667ms ±0.0004ms).

STEP 10. Set VideoBridge frequency to: 30Hz.

STEP 11. The counter should read: 30.000Hz ±0.003Hz (33.3333ms ±0.003ms).

STEP 12. Set VideoBridge frequency to: 20Hz

STEP 13. The counter should read: 20.000Hz ±0.002Hz (50.000ms ±0.005ms).

NOTE: This frequency test uses the VideoBridge sinewave signal for the frequency counter input. Some counter types have improved stability in readout with a squarewave signal input. If this is the case, use internal bus pin 67 (F0) and instrument chassis ground for counter input.

4.1.2 Range Resistor Accuracy Test

STEP 1. VideoBridge setup:

Function	(Rs) %DEViation, Rs
Range	AUTO
Frequency	100Hz
Test level	100mA
Measurement speed	MEDium
Measurement mode	Single
Nominal value	1

STEP 2. Short test leads together (keep movable jaws and fixed jaws of KELVIN KLIPS® adjacent) and perform zero calibration (push CAL key).

STEP 3. Connect the 1Ω standard resistor, making a 4-terminal connection.

NOTE: If a proper 4-terminal connection has not been made, the error message "cannot supply current " will appear at the bottom of the display.

STEP 4. Set VideoBridge measurement mode to CONTinuous.

STEP 5. The display should read: 1.0000Ω ±0.05%.

STEP 6. Connect the 10Ω standard resistor.

STEP 7. Set VideoBridge to nominal value 10.

STEP 8. Set VideoBridge measurement mode to CONTinuous.

STEP 9. The display should read: 1.0000Ω ±0.05%.

STEP 10. Connect the 100Ω standard resistor.

STEP 11. Set VideoBridge test level to 1000mV.

STEP 12. Set VideoBridge to nominal value 100.

STEP 13. Set VideoBridge measurement mode to CONTinuous.

STEP 14. The display should read: 100.00Ω ±0.05%

STEP 15. Connect the 1kΩ standard resistor.

STEP 16 Set VideoBridge to nominal value 1000.

STEP 17. Set VideoBridge measurement mode to CONTinuous.

STEP 18. The display should read: 1.0000kΩ ±0.05%.

STEP 19. Connect the 10kΩ standard resistor.

STEP 20. Set VideoBridge to nominal value 10k.

STEP 21. Set VideoBridge measurement mode to CONTinuous.

STEP 22. The display should read: 10.000kΩ ±0.05%.

STEP 23. Connect the 100kΩ standard resistor.

STEP 24. Set VideoBridge to nominal value 100k.

STEP 25. Set VideoBridge measurement mode to CONTinuous.

STEP 26. The display should read: 100.00kΩ ±0.05%.

STEP 27. Connect the 1MΩ standard resistor. Connect the guard lead to the resistor case (shield).

STEP 28. Set VideoBridge to nominal value 1M.

STEP 29. Set VideoBridge measurement mode to CONTinuous.

STEP 30. The display should read: 1.0000MΩ ±0.05%.

4.1.3 Capacitor Accuracy Test

STEP 1. VideoBridge setup:

Function	(Cs) %DEViation, D
Range	AUTO
Frequency	100Hz
Test level	1000mV
Measurement speed	MEDium
Measurement mode	CONTinuous
Nominal value	1

NOTE: If the calibrated value of the standard is different, set the VideoBridge to that nominal value.

STEP 2. Space the KELVIN KLIPS® of the test leads six inches or more apart and perform an open circuit zero calibration.

STEP 3. Connect the test leads to the 1nF capacitance standard. Connect the guard lead to the capacitor case (shield). Maintain the shield between the KELVIN KLIPS® if the capacitor terminals are closely spaced.

STEP 4. The display should read: .000%Cs ±0.100% and .00000 to .00040 D.

STEP 5. Set VideoBridge frequency to: 1000Hz.

STEP 6. Repeat Steps 2, and 3.

STEP 7. The display should read: .000%Cs ±0.05% and .00000 to .00025 D.

STEP 8. Set VideoBridge frequency to: 10000Hz.

STEP 9. Repeat steps 2 and 3.

STEP 10. The display should read: .000%Cs ±0.25% and .0000 to .0010D.

STEP 11. VideoBridge setup:

Function	(Cs) %DEViation, D
Range	AUTO
Frequency	100Hz
Test level	1000mV
Measurement speed	MEDium
Measurement mode	CONTinuous
Nominal value	100

NOTE: If the calibrated value of the standard is different, set the VideoBridge to that nominal value.

STEP 12. Connect the test leads to the 100nF capacitance standard. Connect the guard lead to the capacitor case (shield).

STEP 13. The display should read: .000%Cs ±0.05% and .00000 to .00040 D.

STEP 14. Set VideoBridge frequency to: 1000Hz.

STEP 15. The display should read: .000% Cs ±0.05% and .00000 to .00025 D.

STEP 16. Set VideoBridge frequency to: 10000Hz.

STEP 17. The display should read: .000%Cs ±0.25% and .0000 to .0010D.

4.1.4 Test Level Accuracy Test

STEP 1. VideoBridge setup:

Function	Cs, D
Range	AUTO
Frequency	1000Hz
Test level	1500mV
Measurement speed	MEDium
Measurement mode	Single
Nominal value	0

STEP 2. Connect the test leads to an AC voltmeter input. Set the voltmeter to the 2V full scale range.

STEP 3. Push VideoBridge SINGLE key.

STEP 4. The AC voltmeter should read: 1500mV ±70mV.

STEP 5. Set VideoBridge test level to: 1000mV.

STEP 6. Push VideoBridge SINGLE key.

STEP 7. The AC voltmeter should read: 1000mV ±50mV.

STEP 8. Set VideoBridge test level to: 500mV.

STEP 9. Push VideoBridge SINGLE key.

STEP 10. The AC voltmeter should read: 500mV ±30mV.

STEP 11. Set VideoBridge test level to: 200mV.

STEP 12. Push VideoBridge SINGLE key.

STEP 13. The AC voltmeter should read: 200mV ±18mV.

STEP 14. Set the AC voltmeter to the 200mV full scale range.

STEP 15. Set VideoBridge test level to: 100mV.

STEP 16. Push VideoBridge SINGLE key.

STEP 17. The AC voltmeter should read: 100mV ±14mV.

STEP 18. Set VideoBridge test level to: 50mV.

STEP 19. Push VideoBridge SINGLE key.

STEP 20. The AC voltmeter should read: 50mV ±12mV.

STEP 21. Set VideoBridge test level to: 20mV.

STEP 22. Push VideoBridge SINGLE key.

STEP 23. The AC voltmeter should read: 20mV ±10.8mV.

STEP 24. Connect the test leads to the AC voltmeter current input. Set the voltmeter to the 200mA full scale range.

STEP 25. Set VideoBridge test level to: 100mA.

STEP 26. Push VideoBridge SINGLE key.

STEP 27. The AC voltmeter should read: 100mA ±5mA.

STEP 28. Set VideoBridge test level to: 50mA.

STEP 29. Push VideoBridge SINGLE key.

STEP 30. The AC voltmeter should read: 50mA ±3mA.

STEP 31. Set VideoBridge test level to: 20mA.

STEP 32. Push VideoBridge SINGLE key.

STEP 33. The AC voltmeter should read: 20mA ±1.8mA.

STEP 34. Set the AC voltmeter to the 20mA full scale range.

STEP 35. Set VideoBridge test level to: 10mA.

STEP 36. Push VideoBridge SINGLE key.

STEP 37. The AC voltmeter should read: 10mA ±1.4mA.

STEP 38. Set VideoBridge test level to: 5mA.

STEP 39. Push VideoBridge SINGLE key.

STEP 40. The AC voltmeter should read: 5mA ±1.2mA.

STEP 41. Set VideoBridge test level to: 2mA.

STEP 42. Push VideoBridge SINGLE key.

STEP 43. The AC voltmeter should read: 2mA ±1.Ø8mA.

STEP 44. Set the AC voltmeter to the 2mA full scale range.

STEP 45. Set VideoBridge test level to: 1mA.

STEP 46. Push VideoBridge SINGLE key.

STEP 47. The AC voltmeter should read: 1mA ±Ø.24mA.

4.2 CALIBRATION

CAUTION

WHEN PERFORMING ANY CALIBRATION OR MAINTENANCE OPERATION, DO NOT REMOVE OR REPLACE CIRCUIT CARDS WHILE THE POWER IS TURNED ON. FAILURE TO TURN POWER OFF MAY RESULT IN ELECTRIC SHOCK OR DAMAGE TO THE INSTRUMENT.

The inherent accuracy of the Model 2100/2110 VideoBridge is based on the high stability of wire-wound, range resistors, and the frequency stability of the crystal-controlled oscillator. There are no full scale adjustments required.

Basic LRC accuracy should remain within specifications for a number of years without maintenance other than occasional (6 month) performance testing.

The only calibration trimmers used in the Model 2100/2110 are on the Analog circuit assembly (P/N 45239). They involve two DC offset trims, two AC zero trims, six high frequency zero-phase trims, and one low frequency zero-phase trim.

The DC offset trims (Section 4.2.2) are a factory adjustment and need be repeated only if one or more operational amplifiers have been replaced on the assembly.

The AC zero trims (Section 4.2.3) are shorted test-lead adjustments. They reduce the amount of digital correction made by the instrument's auto-zero calibration. They need be retrimmed for only different length test-leads. If the short circuit auto-zero calibration feature is used during measurements, these trim adjustments are not required.

The zero dissipation (D) trims (Section 4.2.4) are used to set the low D accuracy for each of the range resistors. They are more critical at the higher test frequencies (> 2000Hz) and need be retrimmed only if performance testing shows the D accuracy is out of specification.

Refer to Figure 4-1 for test point and trimmer locations.

4.2.1 Equipment Required

Oscilloscope	1MHz bandwidth, 50mV/cm vertical sensitivity
Dissipation Factor Standard Capacitors	Polystyrene Capacitors ±20%, Cs = 1µF, 0.25µF, 30nF, 4nF D ≤ 0.0001 (10000Hz)
	Polystrene (or air) Capacitors ±20%, Cs = 1nF, 100pF D ≤ 0.0001 (5000Hz)
Extender Card	S-100 Type

4.2.2 DC Offset Adjustments

STEP 1. Turn instrument power ON. Allow ten minutes warm up time.

STEP 2. Instrument setup:

Function	Cs, D
Range	Auto
Frequency	1000Hz
Test level	5mA
Measurement speed	MEDium
Measurement mode	CONTinuous

STEP 3. Connect oscilloscope probe to test point (TP5) on the Analog circuit card (P/N 45239). See Figure 4-1.

STEP 4. Connect the test leads to create a short circuit.

STEP 5. Adjust trimmer R54 (see Figure 4-1) for Vunk = ØV ±Ø.75V (noisy straight line scope trace).

STEP 6. Separate the unknown test leads to create an open circuit.

STEP 7. Set VideoBridge test level to 5ØmV.

STEP 8. Adjust trimmer R55 (see Figure 4-1) for Vstd = ØV ±Ø.75V (noisy straight line scope trace).

4.2.3 Short Circuit Zero Adjustments

STEP 9. Instrument setup:

Function	Ls, Rs
Range	Auto
Frequency	1ØØØHz
Test level	1ØØmA
Measurement speed	MEDium
Measurement mode	CONTinuous

STEP 1Ø. Connect the unknown test leads to create a short circuit. Keep the moveable jaws and the fixed jaws of the KELVIN KLIPS® adjacent.

STEP 11. Adjust trimmer R46 (see Figure 4-1) until the CRT display reads Rs = Ø ±1ØØμΩ.

STEP 12. Change the test frequency to 15ØØØHz.

STEP 13. Adjust trimmer R45 (see Figure 4-1) until the CRT display reads Rs = Ø ±2ØØμΩ.

4.2.4 High and Low Frequency Phase (D) Adjustments

STEP 14. Connect the test leads to a 1µF dissipation (D) standard.

STEP 15. Instrument setup:

Function	Cs, D
Range	Auto
Frequency	10000Hz
Test level	1000mV
Measurement speed	MEDium
Measurement mode	CONTinuous

STEP 16. Adjust trimmer R19 (see Figure 4-1) for a D reading of 0 ±0.0001.

STEP 17. Connect the test leads to a 0.25µF dissipation (D) standard. Adjust trimmer R20 (see Figure 4-1) for a D reading of 0 ±0.0001.

STEP 18. Connect the test leads to a 30µF dissipation (D) standard. Adjust trimmer R21 (see Figure 4-1) for a D reading of 0 ±0.0001.

STEP 19. Connect the test leads to a 4µF dissipation (D) standard. Adjust trimmer R22 (see Figure 4-1) for a D reading of 0 ±0.0001.

STEP 20. Change the test frequency to 5000Hz.

STEP 21. Separate the unknown test leads to create an open circuit. Perform a zero calibration.

STEP 22. Connect the test leads to a 1nF dissipation (D) standard. Adjust trimmer R23 (see Figure 4-1) for a D reading of 0 ±0.00010.

STEP 23. Separate the unknown test leads to create an open circuit. Perform a zero calibration.

STEP 24. Connect the test leads to a 100pF dissipation (D) standard. Adjust trimmer R40 (see Figure 4-1) for a D reading of 0 ±0.00010.

STEP 25. Repeat steps 20, 21, and 22.

STEP 26. Change the test frequency to 40Hz.

STEP 27. Connect the test leads to a 1μF dissipation (D) standard. Adjust trimmer R15 (see Figure 4-1) for a D reading of 0 ±0.00010.

4.2.5 Calibration Summary

CASSETTE INTERF
(C
or GENERA

SECTION 4.1.1 STEP NO.	MODEL 2100/2110 SETUP					ADJUSTMENT			
	FUNCTION	MEAS SPEED	FREQ	TEST LEVEL	UNKNOWN VALUE	TRIMMER NO.	CARD P/N	TEST POINT	RESULT
5	C_s,D	MED	1 kHz	5 mA	SHORT	R54	45239	TP5	0 V ± 0.75 V
8	C_s,D	MED	1 kHz	50 mV	OPEN	R55	45239	TP5	0 V ± 0.75 V
11	L_s,R_s	MED	1 kHz	100 mA	SHORT	R46	45239	CRT	R_s = 0 Ω ± 1
13	L_s,R_s	MED	15 kHz	100 mA	SHORT	R45	45239	CRT	R_s = 0 Ω ± 2
16	C_s,D	MED	10 kHz	1000 mV	1 µF	R19	45239	CRT	D = 0 ± 0.00
17	C_s,D	MED	10 kHz	1000 mV	0.25 µF	R20	45239	CRT	D = 0 ± 0.00
18	C_s,D	MED	10 kHz	1000 mV	30 nF	R21	45239	CRT	D = 0 ± 0.00
19	C_s,D	MED	10 kHz	1000 mV	4 nF	R22	45239	CRT	D = 0 ± 0.00
21	C_s,D	MED	5 kHz	1000 mV	OPEN	—	45239	—	Zero Calibra
22	C_s,D	MED	5 kHz	1000 mV	1 nF	R23	45239	CRT	D = 0 ± 0.00
23	C_s,D	MED	5 kHz	1000 mV	OPEN	—	45239	—	Zero Calibra
24	C_s,D	MED	5 kHz	1000 mV	100 pF	R40	45239	CRT	D = 0 ± 0.00
25	Repeat Steps 20, 21, and 22								
27	C_s,D	MED	40 Hz	1000 mV	1 µF	R15	45239	CRT	D = 0 ± 0.00

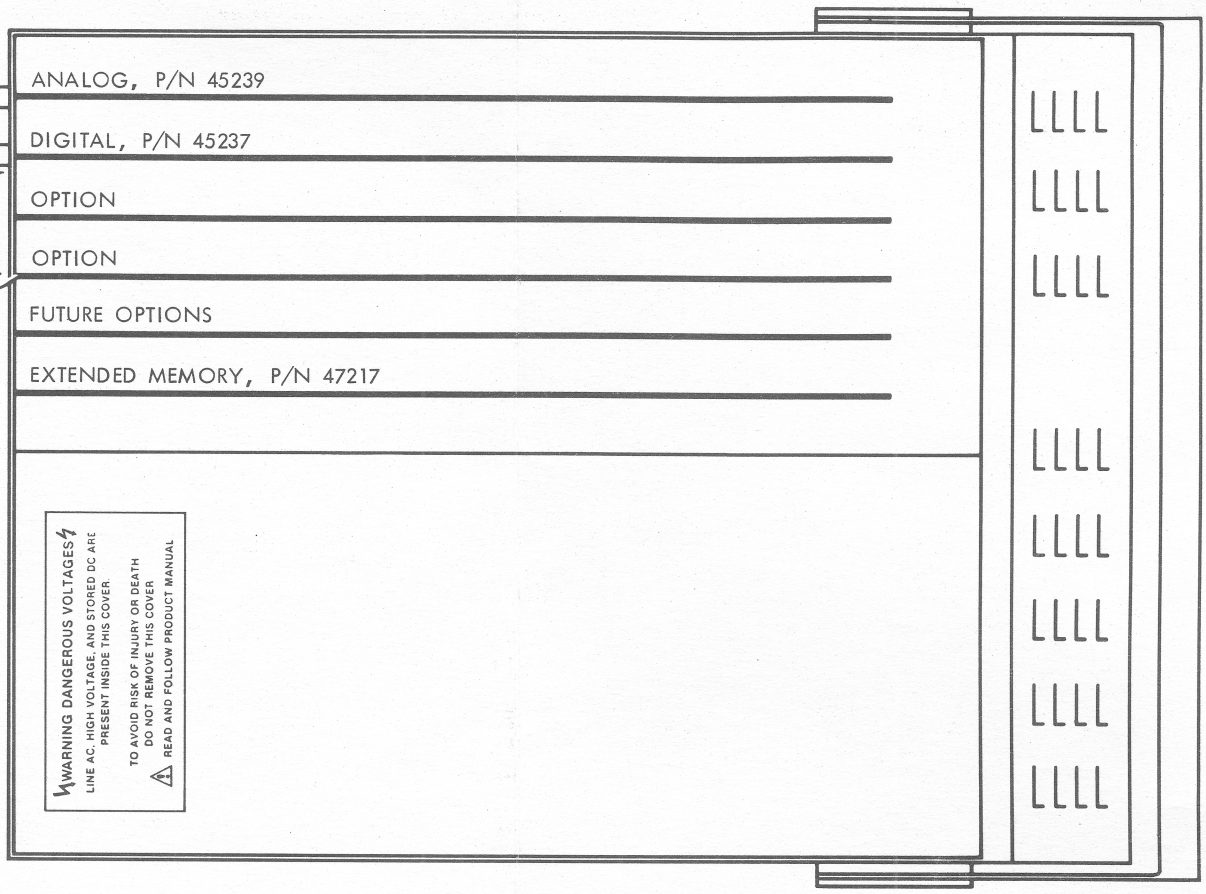

ULT
75 V
75 V
± 100 μΩ
± 200 μΩ
0.0001
0.0001
0.0001
0.0001
libration
0.00010
libration
0.00010
0.00010

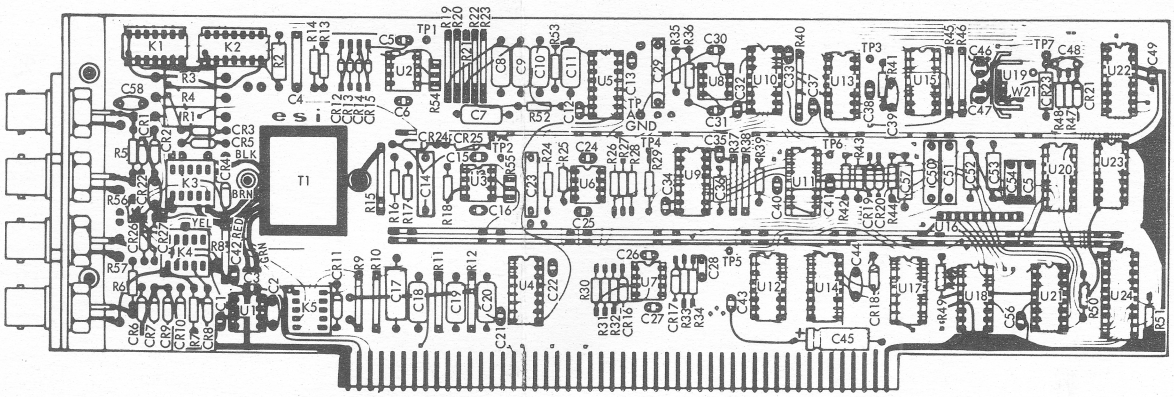

ANALOG CIRCUIT ASSEMBLY P/N 45239

Figure 4-1. Circuit Assembly and Trimmer Locations

(BLANK)

4.3 MAINTENANCE

This section of the manual contains maintenance information for use in preventive maintenance, corrective maintenance, and troubleshooting of the Model 2100/2110.

4.3.1 Preventive Maintenance

WARNING

REMOVAL OF INSTRUMENT COVERS MAY CONSTITUTE AN ELECTRICAL HAZARD AND SHOULD BE ACCOMPLISHED BY QUALIFIED SERVICE PERSONNEL ONLY.

Preventive maintenance performed on a regular basis will improve the reliability of this instrument. It may include cleaning, visual inspection, or even monitoring the operating environment.

4.3.1.1 Cleaning

CAUTION

AVOID THE USE OF CHEMICAL CLEANING AGENTS WHICH MIGHT DAMAGE THE PLASTICS USED IN THIS UNIT. DO NOT APPLY ANY SOLVENT CONTAINING KETONES, ESTERS, OR HALOGENATED HYDROCARBONS. TO CLEAN, USE ONLY WATER SOLUBLE DETERGENTS, ETHYL, METHYL, OR ISOPROPYL ALCOHOL.

Exterior. Loose dust may be removed with a soft cloth or a dry brush. Water and mild detergent may be used; however, abrasive cleaners should not be used.

Interior. Use low-velocity compressed air to blow off the accumulated dust. Hardened dirt can be removed with a cotton-tipped swab, soft, dry cloth, or a cloth dampened with a mild detergent and water.

4.3.1.2 Visual Inspection

This instrument should be inspected occasionally for such defects as broken connections, improperly seated semiconductors, damaged circuit cards, and heat-damaged parts.

The corrective procedure for most visible defects is obvious. If heat damaged components are found, particular care must be taken. Overheating usually indicates other trouble may be present in the instrument. It is important that the cause of overheating be corrected to prevent recurrence of the damage.

4.3.2 Troubleshooting

The following troubleshooting information is provided to augment other sections of this manual. The Circuit Description and Part Lists and Schematic Diagrams sections should be used to full advantage. Section 3 in this manual gives circuit description information while, Section 5 contains the part lists and schematic diagrams.

4.3.2.1 Troubleshooting Aids

Schematic Diagrams. Schematic diagrams are provided on foldout pages in Section 5. The electrical value and circuit numbers of each component are shown on the diagrams. Power supply voltages are also shown.

Circuit-Card Illustrations. Illustrations of circuit cards are shown along with the schematic diagrams. Each card-mounted electrical component is identified by its circuit number.

Test Point Locations. Test point locations have been indicated on both the schematic diagrams and the circuit-card illustrations.

Component Color Code. Colored stripes or dots on resistors and capacitors signify electrical values, tolerances, etc., according to the EIA standard color code. Components not color-coded usually have the value printed on the body.

Multi-pin Connector Identification. Multi-pin connectors are soldered to the circuit cards. They mate with ribbon type cable assemblies to carry signals between cards. Connector pin 1 is indexed with a number 1 etched on the circuit card. Each connector is identified by a P number and can be located by using the circuit card illustration in Section 5 of this manual. P numbers shown on the illustration correspond to the P numbers on the schematic diagrams.

4.3.2.2 Troubleshooting Procedure

WARNING

TO AVOID ELECTRIC SHOCK FROM DANGEROUSLY HIGH VOLTAGES. USE THE FOLLOWING PROCEDURES ONLY WHEN TROUBLESHOOTING THE ANALOG AND DIGITAL MEASUREMENT PORTIONS OF THIS INSTRUMENT. DO NOT USE THIS PROCEDURE TO TROUBLESHOOT THE POWER SUPPLY OR CRT CIRCUITRY.

This troubleshooting procedure checks the simple trouble sources before proceeding with more extensive troubleshooting. The first few checks ensure proper connection and operation. If the trouble is not located by these checks, the remaining steps aid in locating the component. When the defective component is located, it should be replaced using the information given under Corrective Maintenance.

1. **Check Instrument Setup.** Make sure the instrument is properly plugged into a wall socket. Also, check the rear panel line voltage switch and the line fuse to see that they match the line voltage being used.

2. **Visual Check.** Visually check the portion of the instrument in which the trouble is suspected. Many problems can be located by visual indications such as unsoldered connections, broken wires, damaged circuit cards, damaged components, or components bent over and touching.

3. **Check Voltages.** A circuit stage may not be operating due to incorrect supply voltages. Typical supply voltages are given on the diagrams; however, these are not absolute and may vary slightly between instruments.

4. **Trace the Signal.** The analog portion of the circuitry can be checked by tracing the signal with an oscilloscope. By noting where the signal disappears or distorts, the source of trouble can be located.

5. **Check Individual Components.** The following methods are provided for checking the individual components. Components which are soldered in place can sometimes be checked by disconnecting one end to isolate the measurement from the effects of surrounding circuitry.

   a. **TRANSISTORS.** It is always best to check transistor operation under operating conditions. Transistors that are soldered to the circuit card should first be checked in-circuit using a dynamic transistor testor; then a replacement can be substituted to verify that the old transistor is bad. Socketed transistors can be checked by substituting a component known to be good; however, be sure that circuit conditions are not such that a replacement might also be damaged. If substitute transistors are not available, check the old transistor out-of-circuit using a dynamic tester. Be sure the power is off before attempting to remove or replace any transistor.

b. **INTEGRATED CIRCUITS.** Analog IC's such as comparators and operational amplifiers can usually be checked in-circuit with a voltmeter or test oscilloscope. An understanding of the device and circuit operation is essential for this type of troubleshooting. (For example, an op amp can be tested by measuring the input and output circuit voltages and comparing this ratio to the ratio of input and feedback resistors.)

Analog IC's that are socketed can also be checked out-of-circuit using a dynamic tester. Digital IC's are best checked in-circuit using a logic probe or voltmeter. Use care when checking voltages and waveforms around DIP (Dual-Inline-Package) IC's so that adjacent leads are not shorted together. A convenient means of connecting a test probe to 14 and 16 pin IC's is with an IC test clip. This device also serves as an extraction tool.

c. **DIODES.** A diode can be checked for an open or shorted condition by measuring the resistance between terminals with an ohmmeter set to the R x 1k scale. The diode resistance should be very high in one direction and very low when the meter leads are reversed.

DO NOT USE AN OHMMETER SCALE THAT HAS A HIGH INTERNAL CURRENT. HIGH CURRENTS MAY DAMAGE THE DIODES UNDER TEST.

d. **RESISTORS.** Check resistors with an ohmmeter. Resistor tolerance is given in the Parts List. Resistors normally do not need to be replaced unless the measured value varies widely from the specified value.

e. **CAPACITORS.** A leaky or shorted capacitor can be detected by checking resistance with an ohmmeter on the highest scale. Use an ohmmeter that will not exceed the voltage rating of the capacitor. (Be careful to observe correct polarity when checking electrolytic capacitors.) The resistance reading should be high after initial charge of the capacitor. An open capacitor can best be detected with a capacitance meter, or by checking whether the capacitance passes AC signals.

4.4 CORRECTIVE MAINTENANCE

Corrective maintenance consists of component replacement and instrument repair.

4.4.1 Obtaining Replacement Parts

Standard Parts. All electrical and mechanical replacement parts for the Model 2100/2110 can be obtained from Electro Scientific Industries, Inc. However, many of the electronic components can be obtained locally in less time than is required to order them from ESI. Before purchasing or ordering replacement parts, check the parts list in Section 5 for value, tolerance, rating, and description.

> **NOTE:** When selecting replacement parts, it is important to remember that the physical size and shape of a component may affect the performance of the instrument. All replacement parts should be direct replacements unless it is known that a different component will not adversely affect instrument performance.

Order all special parts directly from Electro Scientific Industries.

4.4.2 VideoBridge - CRT Removal/Replacement

4.4.2.1 CRT Handling, Storage, and Disposal Precautions

Handling

The cathode-ray tube is very delicate and requires special care when handling. Wear protective safety goggles and clothing when handling the CRT. Avoid striking the CRT against anything that might crack the glass or otherwise cause it to implode.

Storing

Store the CRT in a protective carton whenever possible. If that is not possible, store in a protected location. The storage location should include a soft, smooth surface to protect it against damage or scratching the faceplate.

WARNING

HANDLE THE CRT WITH CARE. ROUGH HANDLING OR SCRATCHING CAN CAUSE THE CRT TO IMPLODE. TO AVOID PERSONAL INJURY FROM IMPLOSION WEAR PROTECTIVE GOGGLES AND CLOTHING WHEN WORKING WITH THE CRT. ONLY WORK WITH THE CRT IF YOU ARE QUALIFIED TO DO SO.

Disposing

Cathode-ray tube disposal requires special precautions be taken. A CRT can be extremely dangerous. Do not dispose of the CRT by putting it in the garbage; it could cause physical injury. To properly dispose of the CRT, save and re-use the package in which the replacement CRT was shipped. If the original packaging is unfit for use or not available, repackage the CRT as follows:

STEP 1. Obtain a carton of corrugated cardboard having inside dimensions of not less than six inches more than the CRT dimensions; this will allow for cushioning.

STEP 2. Surround the unit with polyethylene sheeting to protect the CRT.

STEP 3. Cushion the CRT on all sides by tightly packing dunnage of urethane foam between the carton and the CRT allowing three inches on all sides.

STEP 4. Seal the carton with shipping tape or an industrial stapler.

STEP 5. Send the CRT to the location from which the new CRT was obtained.

WARNING

THE CRT IS CAPABLE OF STORING A HIGH VOLTAGE CHARGE AFTER POWER HAS BEEN REMOVED. TO PREVENT PERSONAL INJURY FROM ELECTRIC SHOCK, USE AN OSHA OR UL APPROVED SHORTING STRAP TO DISCHARGE ALL HIGH VOLTAGE POINTS TO CHASSIS GROUND. THIS PROCEDURE MUST BE PERFORMED BY QUALIFIED PERSONNEL ONLY.

4.4.2.2 Removal/Replacement Procedure

STEP 1. Instrument Preparation. Turn instrument power OFF and remove all external connections.

STEP 2. Outer Cover. Remove the five rear panel 8 x 32 screws holding the outer cover and slide cover off.

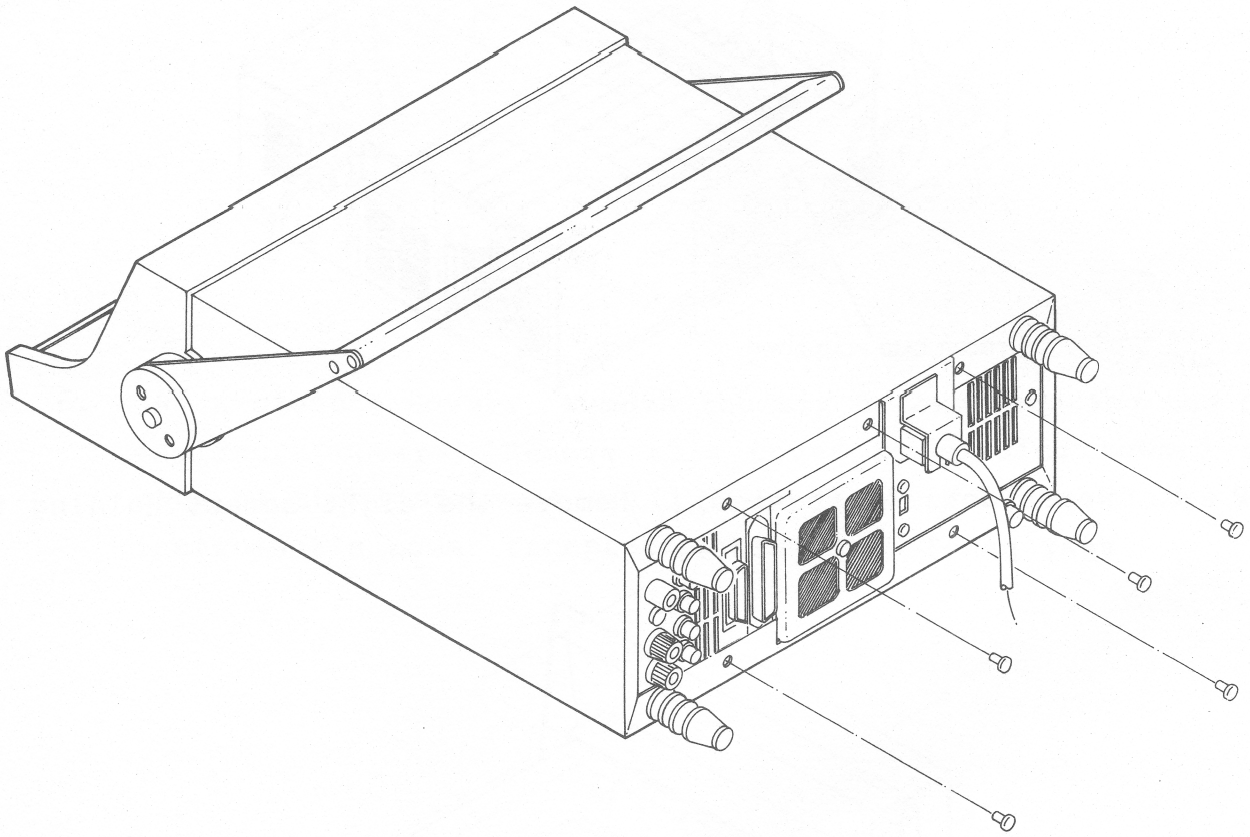

Model 211Ø Rear View

STEP 3. Circuit Card Hold-Downs. Remove the screws securing the two plastic circuit card hold-downs and remove.

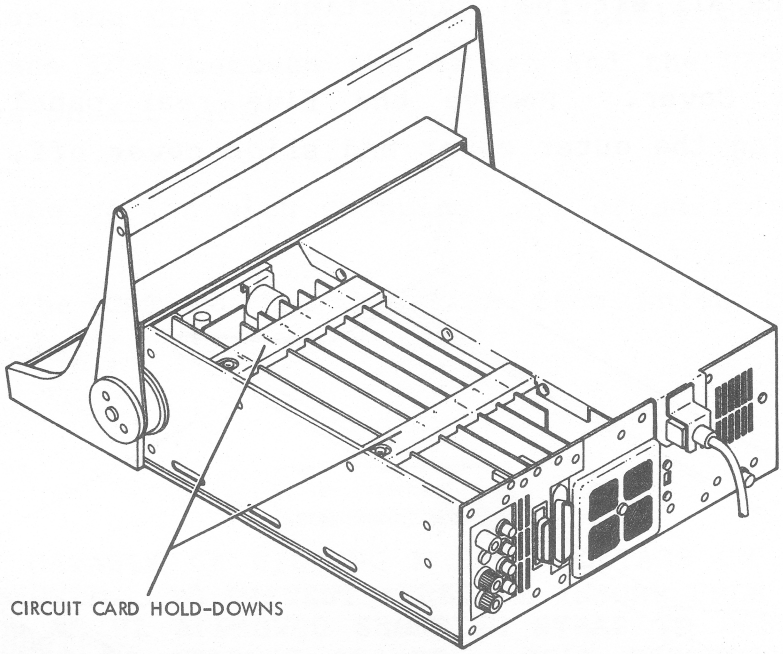

STEP 4. Rear Panel (left side). Remove the eight screws holding the rear panel (left side).

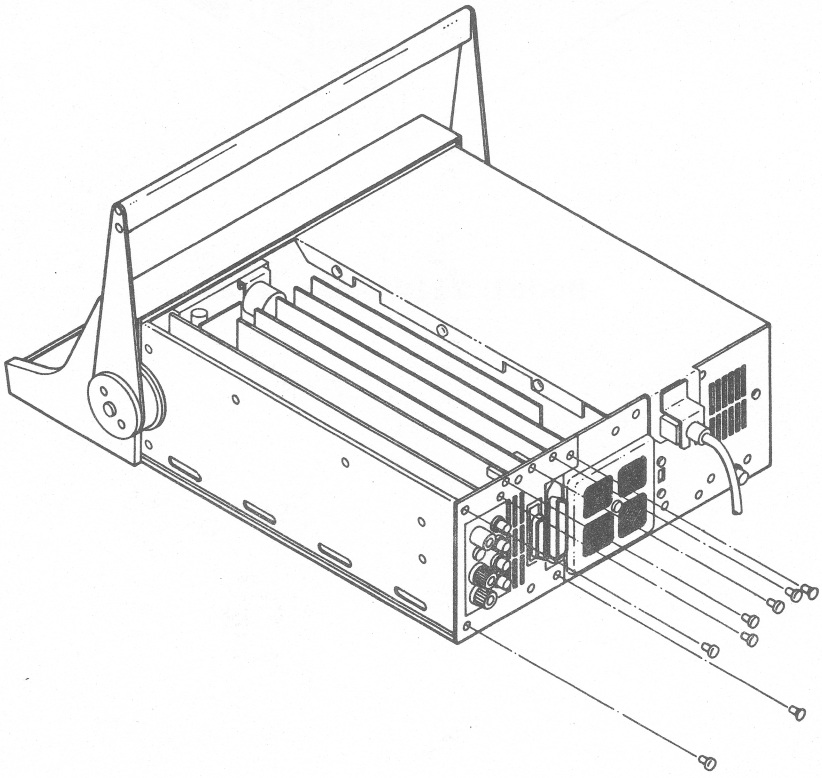

STEP 5. Circuit Assemblies. Remove four screws located on instruments left side. Remove all circuit assemblies.

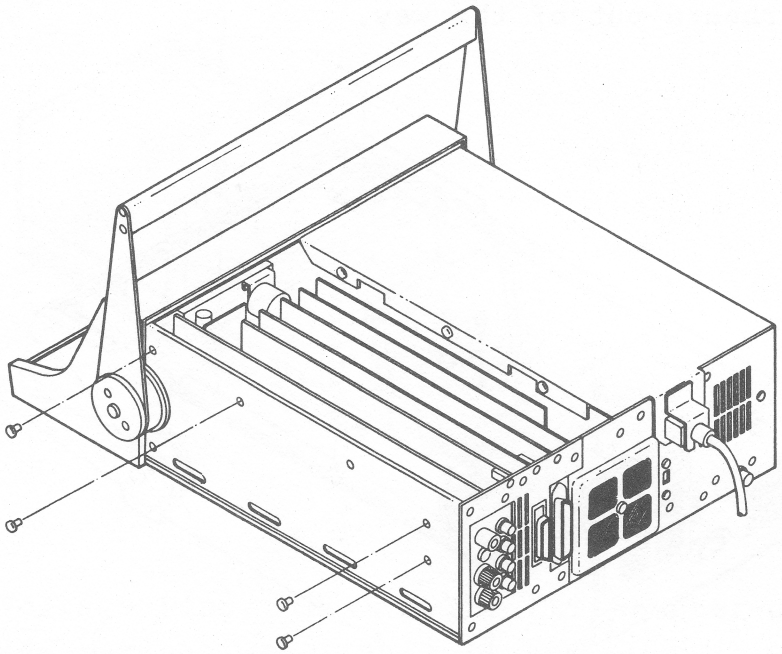

STEP 6. CRT Enclosure Cover. Remove the six screws securing the CRT enclosure cover. Remove this cover by sliding toward the back of the instrument until the power cord plug clears the instrument's power receptacle.

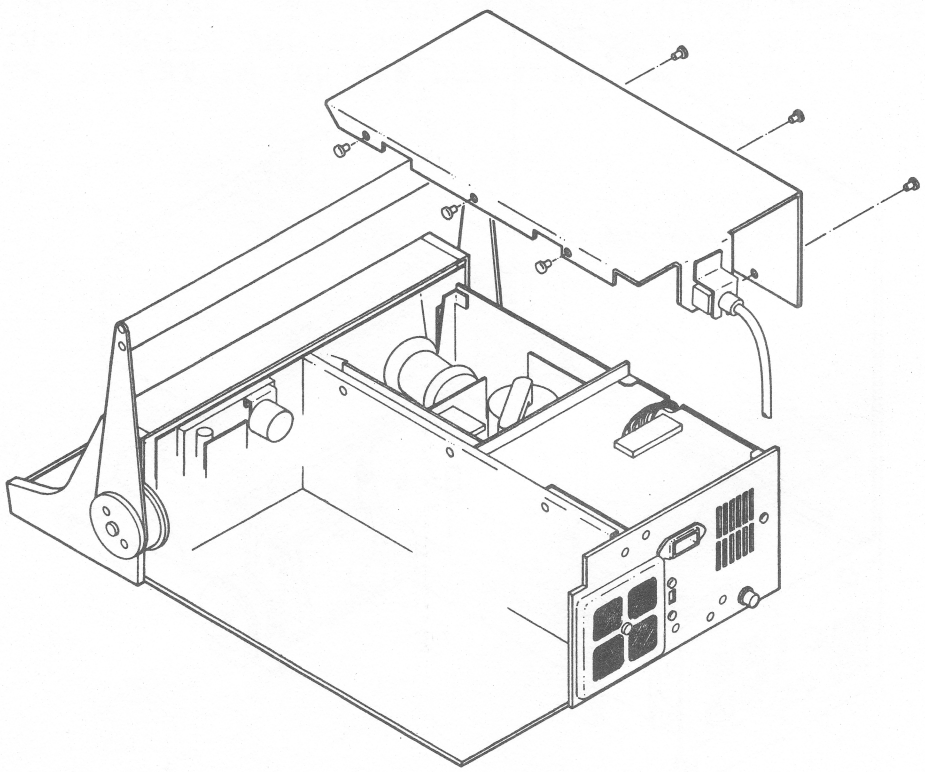

STEP 7. Motherboard. Turn instrument over to rest top-side down. Remove the eight screws, unplug the keyboard, and hinge the motherboard out of the way.

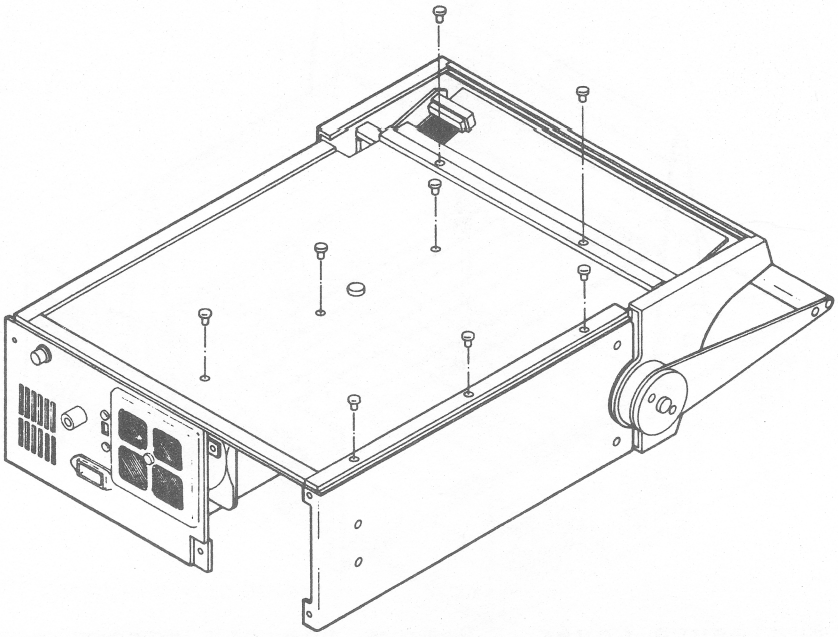

STEP 8. Front Panel. Remove the three screws and two nuts holding the front panel to the CRT enclosure. Set the front panel off to the side.

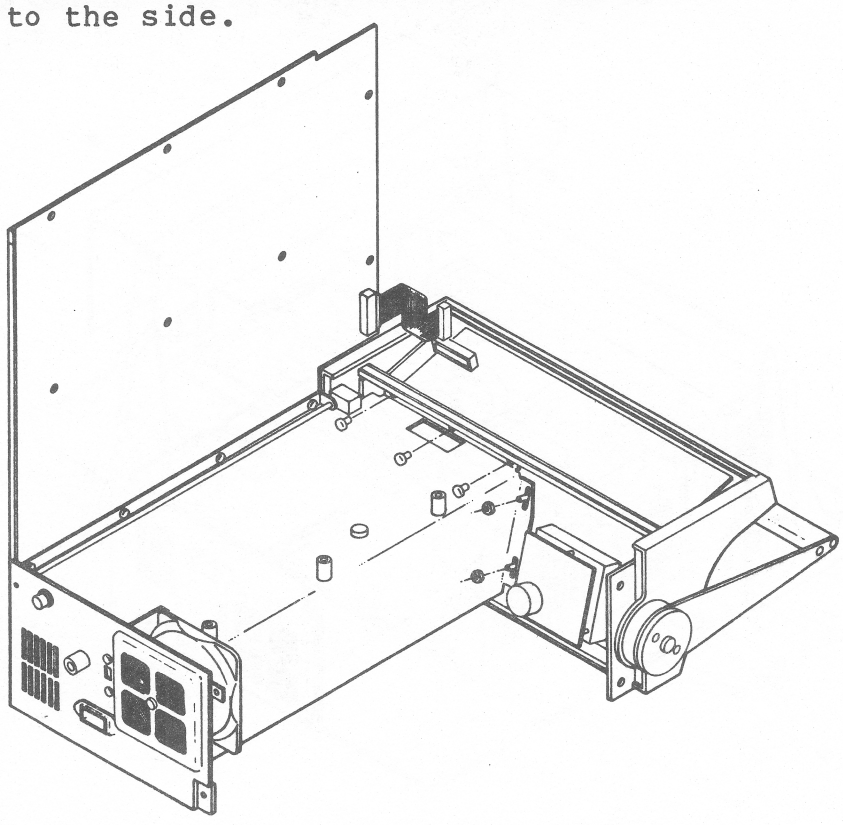

STEP 9. Cathode-Ray Tube. Turn instrument right-side up. Remove the four screws holding the CRT (2 on each side).

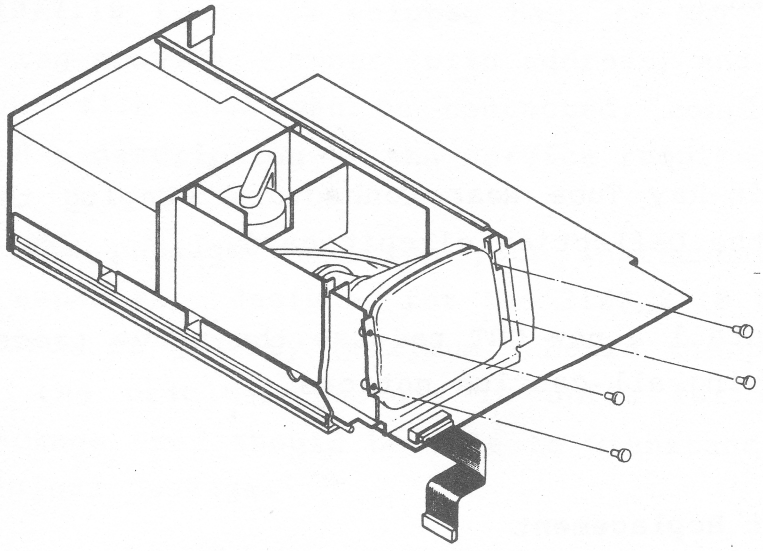

STEP 1Ø. High Voltage Plug. Rotate the CRT counter-clockwise until the High Voltage anode lead is facing up. Remove the High voltage lead.

WARNING

HANDLE THE CRT WITH CARE. ROUGH HANDLING OR SCRATCHING CAN CAUSE THE CRT TO IMPLODE. TO AVOID PERSONAL INJURY FROM IMPLOSION WEAR PROTECTIVE GOGGLES AND CLOTHING WHEN WORKING WITH THE CRT. ONLY WORK WITH THE CRT IF YOU ARE QUALIFIED TO DO SO.

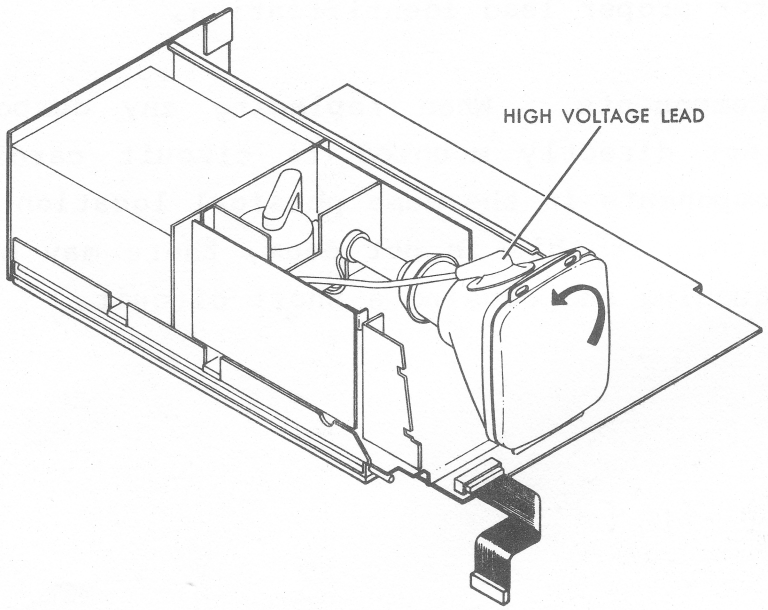

STEP 11a. Cathode-Ray Tube Rear Connector. Carefully pull the CRT out approximately 2 inches or until the rear plug can be removed.

OR

STEP 11b. Cathode-Ray Tube Rear Connector. Unplug the CRT connector from the Deflection circuit card.

STEP 12. To install a new CRT reverse the above procedure, carefully observing all caution notices.

4.4.3 Component Replacement

WARNING

DISCONNECT ALL POWER TO THE INSTRUMENT BEFORE REPLACING COMPONENTS. FAILURE TO DO SO MAY RESULT IN ELECTRICAL SHOCK.

Semiconductor Replacement. Replacement semiconductors should be of the original type or a direct replacement. If the replacement semiconductor is not of the original type, check the manufacturer's basing diagram for proper lead identification.

Free Standing Components. When replacing any components that are free-standing (not directly mounted to circuit cards), be sure to place the new components in the same physical location and position as the old components. If this is not done, there may be a possibility of components touching and causing a short circuit.

4.5 REPACKAGING FOR SHIPMENT

If the Model 2100/2110 is to be shipped back to ESI for service or repair, attach a tag showing: owner (with address) and the name of an individual at your firm that can be contacted, complete instrument serial number, and a description of the service required.

Save and re-use the package in which your instrument was shipped. This package was especially designed for the 2100/2110 to withstand 30 - 40 times the force of gravity (maximum) should the package fall or be dropped. If the original package is unfit for use or is not available, the package used should be able to withstand the same 30 - 40 g's as the original package.